EGSTON Standard
N1hFSW 12W

General description

The N1hFSW 12W family of switch mode power supplies delivers typically 12W output and features wide-range input (90-264V), small size and light weight.

The units are available in cable–cable, terminal version and printed circuit module versions.

Features

- **EuP Tier II conform**
- Wide input range (90-264V)
- Output voltage fixed (5-24VDC)
- Output voltage stability ±3% on PCB
- Output power 12W
- Protection class II
- Short circuit proof
- Manufacturing according to ISO 9001
- Wide operating temperature range (-20 to +50°C)
- **Cable – cable version**
  The unit is designed to fit into standard flush boxes and can be mounted onto wood-surfaces or materials with unknown flammability with screws. The connection to mains and to the customer unit is realised with cables.
- **Printed circuit board module version**
  The unit is designed the be soldered onto a PCB with soldering pins.
- **Terminal version**
  The unit is designed to connect the wires into a terminal.

Dimensions				
Diameter	**Length**	**Width**	**Height**	**Unit**
57,1	50,2	50,2	25,5	mm

Input Parameter	Key	Min	Typ	Max	Unit
Input voltage	U_1	90		264	V
Input current	I_1	2	130	300	mA
Input frequency	f_1	47	50	63	Hz
Op. Temperature	T	-20		50	°C
Efficiency	η		80		%
		According EuP Tier II			

Output Parameter	Key	Min	Typ	Max	Unit
Output Power	P_2			12	W
Output Voltage	U_2	5		24	V
Output current	I_2			1	A
Ripple voltage	U_{RMS}			140	mV RMS
Output voltage tolerance at PCB	T_{U2}			3	%
Output voltage tolerance cable-cable version with EGSTON standard cable 19cm/0,5mm²	T_{U2}			+3/-4	%

Tel: (++43) 2984 / 2226-0
Fax: (++43) 2984 / 2226-293
E-Mail: info@egston.com

© 11/2010 **EGSTON** System Electronics Eggenburg GmbH
Grafenbergerstraße 37
A-3730 Eggenburg, Austria

Typical output chart

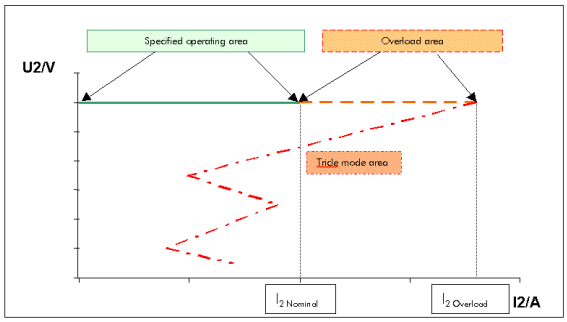

Test standards and approvals

Test standards
EN 60335
EN 60950
EN 61558
UL 1310
EN 61000-6-1
EN 55022
EN 55011
EN 55014-1

Approvals

Tel: (++43) 2984 / 2226-0
Fax: (++43) 2984 / 2226-293
E-Mail: info@egston.com

© 11/2010 **EGSTON** System Electronics Eggenburg GmbH
Grafenbergerstraße 37
A-3730 Eggenburg, Austria

Housing Dimension

General housing Dimension:

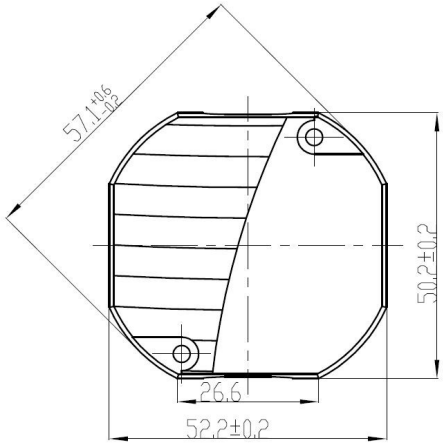

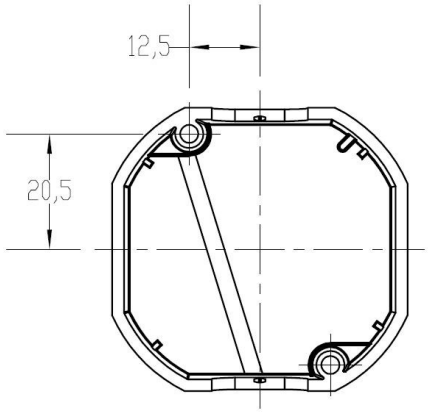

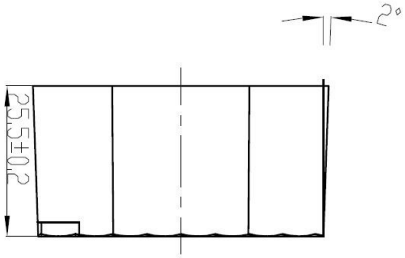

Tel: (++43) 2984 / 2226-0
Fax: (++43) 2984 / 2226-293
E-Mail: info@egston.com

© 11/2010 **EGSTON** System
Electronics Eggenburg GmbH
Grafenbergerstraße 37
A-3730 Eggenburg, Austria

Printed circuit board module version:

AVAILABLE ON REQUEST

Cable – cable version:

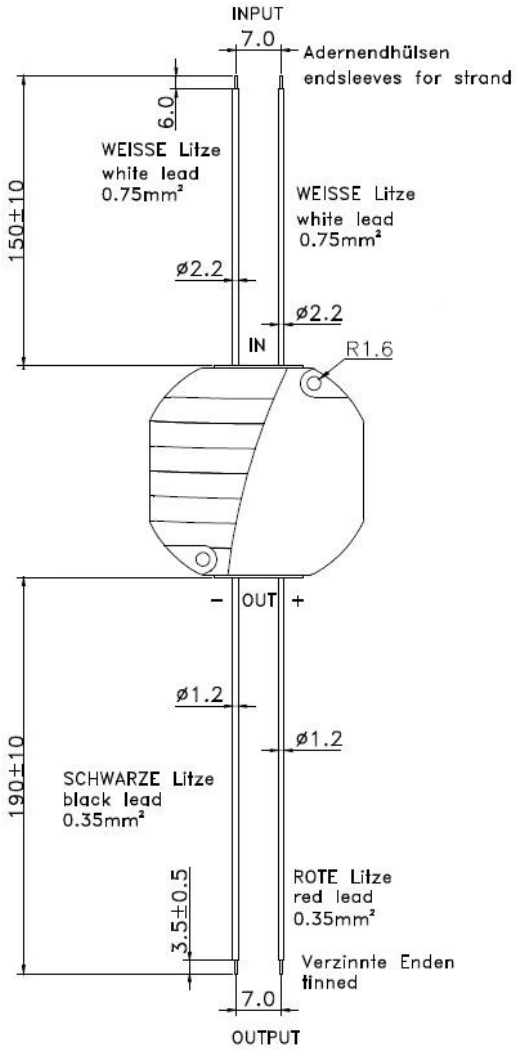

Tel: (++43) 2984 / 2226-0
Fax: (++43) 2984 / 2226-293
E-Mail: info@egston.com

© 11/2010 **EGSTON** System
Electronics Eggenburg GmbH
Grafenbergerstraße 37
A-3730 Eggenburg, Austria

Terminal version:

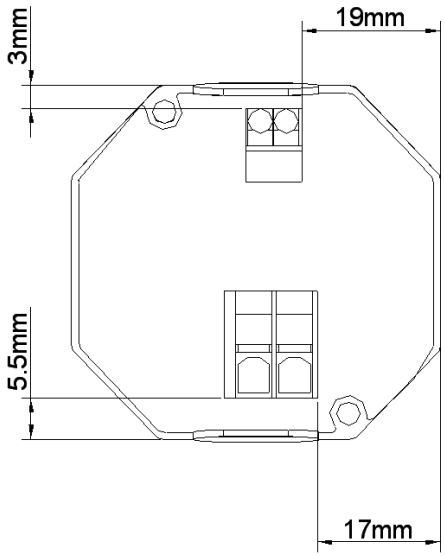

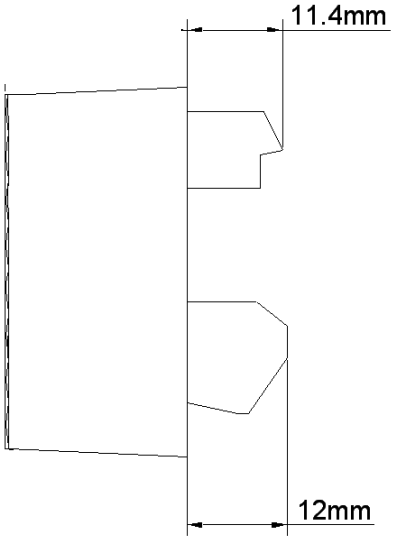

Tel: (++43) 2984 / 2226-0
Fax: (++43) 2984 / 2226-293
E-Mail: info@egston.com

© 11/2010 **EGSTON** System
Electronics Eggenburg GmbH
Grafenbergerstraße 37
A-3730 Eggenburg, Austria